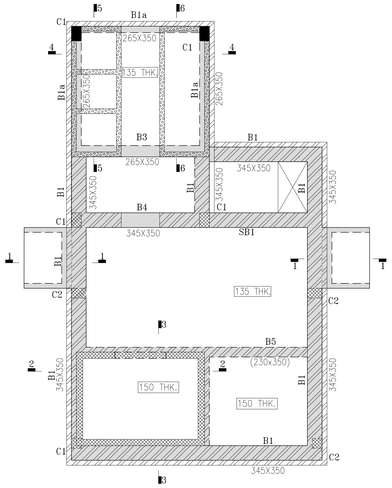

STAIR CABIN PLAN AT +15.600M LVL.

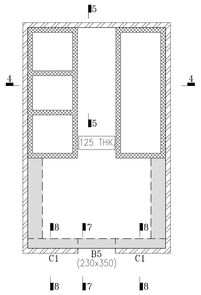

WATER TANK TOP SLAB PLAN

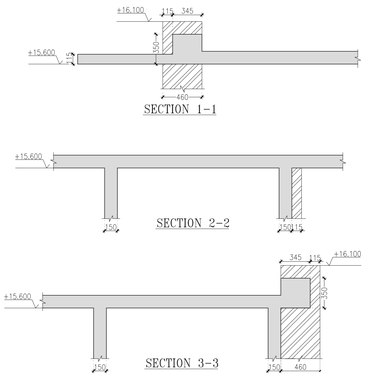

SECTION 1-1

SECTION 2-2

SECTION 3-3

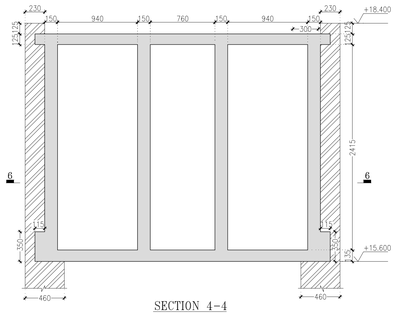

SECTION 4-4

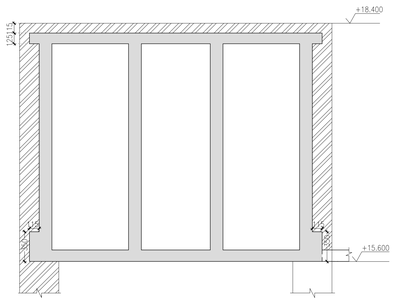

SECTION 5-5

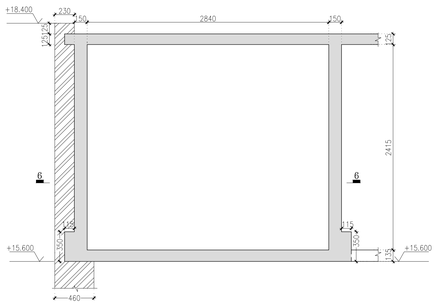

SECTIONAL PLAN 6-6

THIS DRAWING IS THE PROPERTY OF VINOD SHAH Consulting Engineers Pvt. Ltd. AND NOT TO BE COPIED OR USED WITHOUT THEIR PERMISSION.

NOTES:

DETAIL	REMARKS
REFERENCE	ALL DIMENSIONS TO BE CHECKED AND CORRELATED WITH ALL RELATED DRAWINGS AND ANY AMBIGUITY SHALL BE IMMEDIATELY BROUGHT TO THE NOTICE OF THE ENGINEERS BEFORE COMMENCEMENT OF THE WORK.
DIMENSION	ALL DIMENSIONS ARE MM AND LEVELS ARE IN METER. ALL DIMENSIONS ARE TO BE READ AND NOT TO BE MEASURED.
MASONRY SPEC.	ALL MASONRY WALLS SHALL BE CONSTRUCTED FROM BURNT CLAY BRICKS UPTO SLL LEVEL WITH MIN. CRUSHING STRENGTH OF 7.5 N/mm^2 ON GROSS AREA UNLESS OTHERWISE SPECIFIED. BRICK MASONRY SHALL BE BEDDED WITH CEMENT : SAND MORTAR IN PROPORTION OF 1:4 UNLESS OTHERWISE SPECIFIED.
CSE BLOCK MASONRY SPEC.	ALL CSEB MASONRY WALLS SHALL BE CONSTRUCTED FROM COMPRESSED STABILIZED EARTH BLOCK WITH MIN. CRUSHING STRENGTH OF 7.5 N/mm^2 ON GROSS AREA UNLESS OTHERWISE SPECIFIED. CSEB MASONRY SHALL BE BEDDED WITH CEMENT : SAND MORTAR IN PROPORTION OF 1:4 UNLESS OTHERWISE SPECIFIED. PRISM TEST IS RECOMMENDED TO ENSURE THE EFFICIENCY OF MASONRY WALL AGAINST COMPRESSED STABILIZED EARTH BLOCK
CONC. SPEC.	ALL CONCRETE MIX M25 UNLESS OTHERWISE SPECIFIED.
REINFORCEMENT	Fe INDICATES TMT STEEL (Fe 500D) OF YIELD STRENGTH 500 N/mm^2
COVER	CLEAR COVER TO MAIN STEEL IS AS FOLLOWS PILES : 50 mm. PILE CAP : 60 mm. GRADE BEAM : 30 mm. FOOTINGS : SIDES & TOP 50 mm. BOTTOM 50 mm. COLUMNS & PEDESTALS : 40 mm. BEAMS & LINTELS : 30 mm. SLABS : 25 mm.
LAPS/ SPLICES	LAP LENGTH IS FIFTY TIMES BAR DIAMETER
SPECIAL NOTE :	THE BUILDING IS DESIGNED FOR G+3 STOREYS ONLY AND NO FUTURE PROVISION IS CONSIDERED
LEGENDS:	COLUMN/WALL STARTS FROM THIS LEVEL COLUMN/WALL STOPS AT THIS LEVEL

FOR TENDER PURPOSE ONLY

No.	Date.	Remarks.

Revisions

Date	Prints	Issued to	Date	Prints	Issued to

Distribution of Prints

Consultants

- ● **Structural Consultants**
  VINOD SHAH Consulting Engineers Pvt. Ltd.
- ○ **Services Consultants**
  DBHMS
- ○ **Landscape Consultants**
  Earthscapes Consultancy Pvt Ltd
- ○ **Road and Pathways Consultants**
  Arhmm Infra Consultants LLP

Project

Nalanda University, Rajgir, Bihar

Title

STRUCTURAL G.A. DRAWINGS OF STAIRCABIN & WATER TANK PLAN & DETAILS FOR FACULTY HOUSING (APPT. TYPE-2)

Dealt : DILIP	Drawing No.
Checked : AJ	NUC- FAH(2)-S-A.9
Scale : 1:50, 1:25	
Date : 07/09/2016	

VASTU SHILPA CONSULTANTS
Architects I Planners I Urban Designers

'Sangath', Thaltej Road, Ahmedabad - 380054
Phone: 079 - 27464537 Fax: 079 - 27452006
www.sangath.org e-mail: **vsc@sangath.org**