Drawing and design are the property of Vastu Shilpa Consultants and are not to be copied or used without their permission.

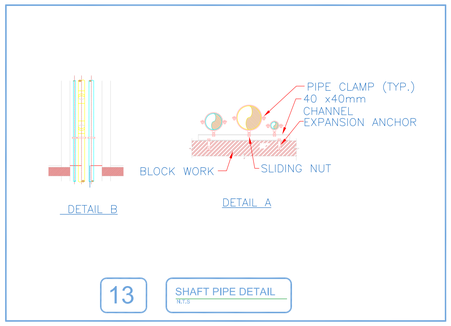

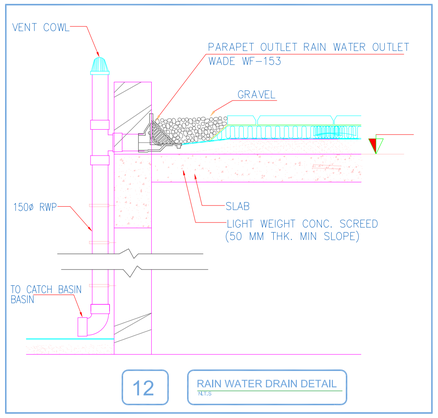

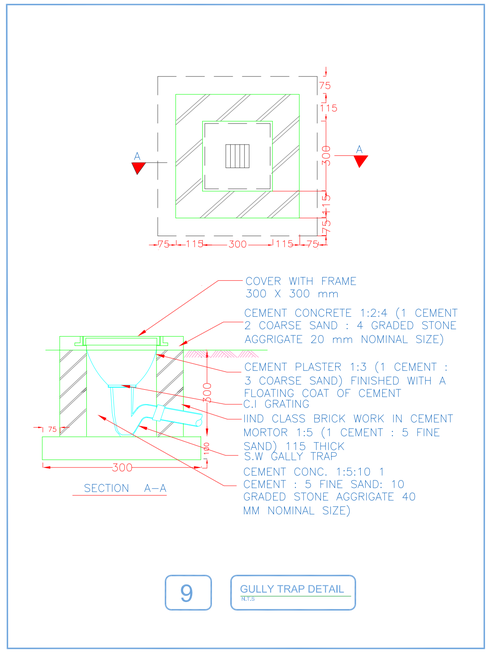

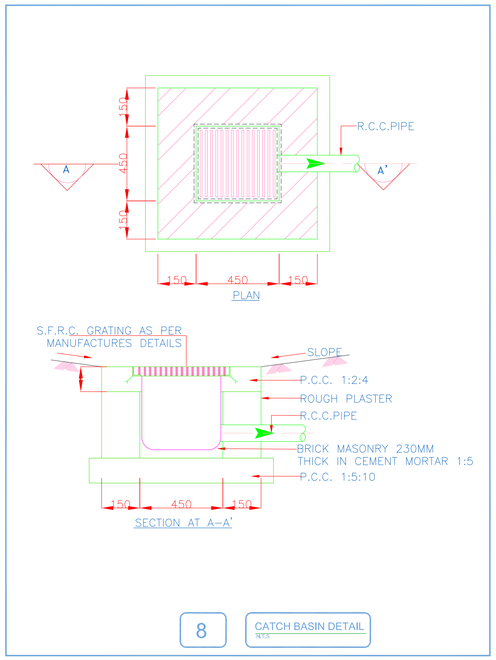

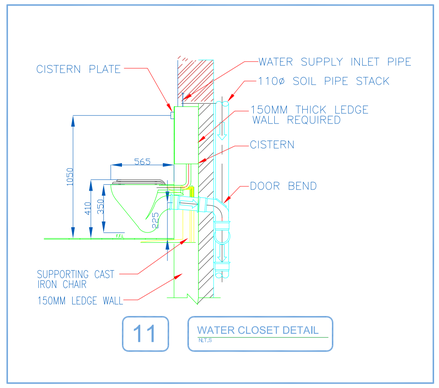

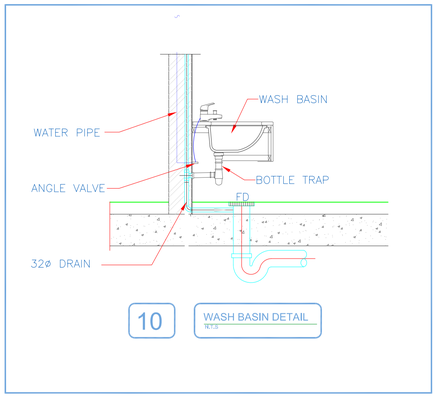

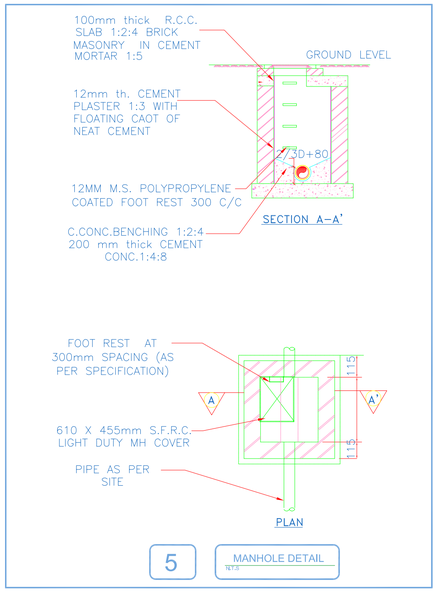

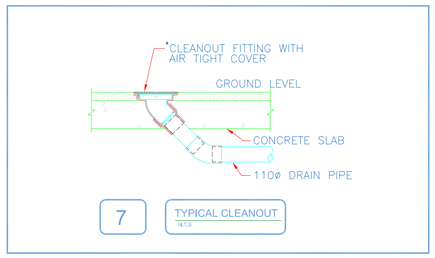

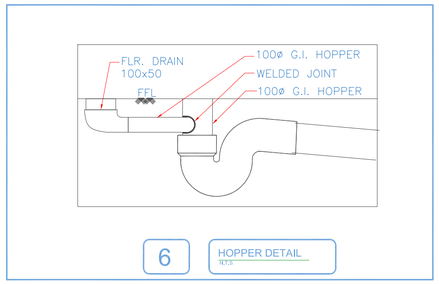

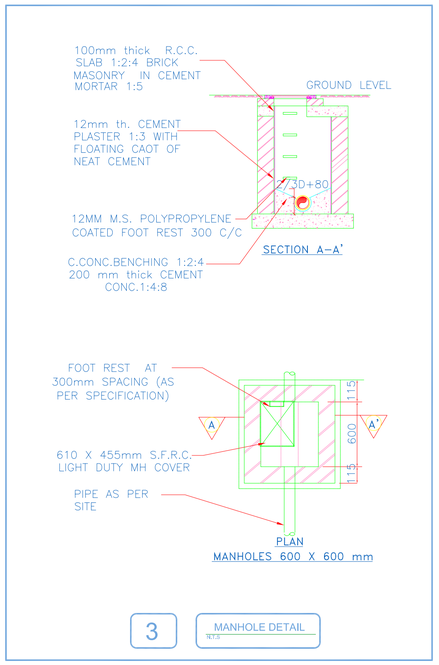

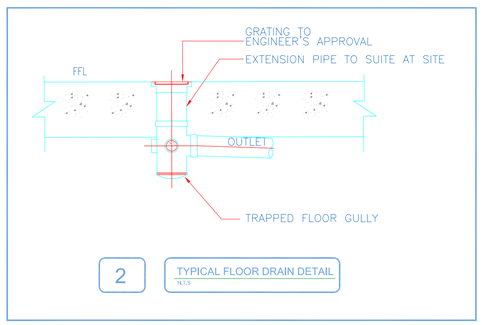

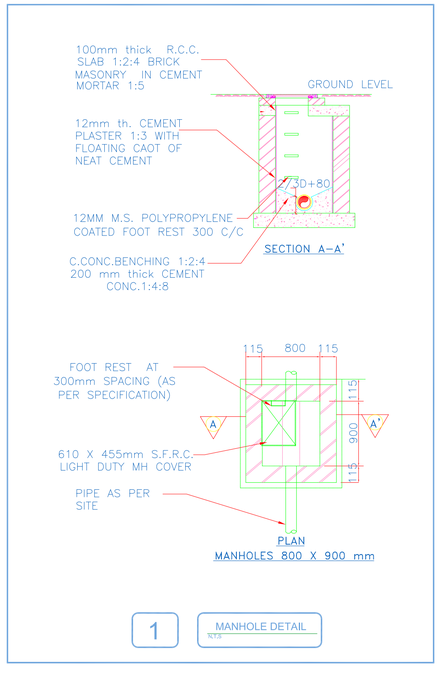

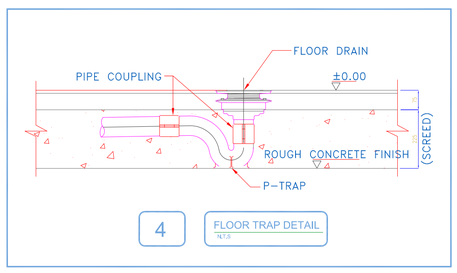

NOTES

1. ALL DIMENSIONS SHALL BE CHECKED AND CO-RELATED WITH THE STRUCTURAL DRAWINGS AND ANY AMBIGUITY SHALL BE IMMEDIATELY BROUGHT TO THE NOTICE OF THE ARCHITECT BEFORE COMMENCEMENT OF THE WORK.
2. ALL DIMENSIONS ARE IN CENTIMETERS UNLESS AND OTHERWISE SPECIFIED
3. ALL LEVELS ARE FINISHED LEVELS.
4. ALL MARGINS, CLEARENCES ETC. REQUIRED AS PER BYE-LAWS SHOULD BE CHECKED AND PROVIDED BY THE CONTRACTOR AND ANY DESCRIPENCIES FOUND SHOULD BE IMMIDIATELY BROUGHT TO THE NOTICE OF ARCHITECT BEFORE COMMENCEMENT OF WORK.
5. FOR DETAILS OF ALL CUTOUTS IN SLABS AND BEAMS REFER SERVICES CONSULTANTS DRAWINGS.
6. FOR STAIRCASE DETAILS REFER DRAWING. NO. 5.1
7. FOR TOILET DETAILS REFER DRAWING. NO. 6.1
8. FOR DOOR DETAILS REFER DRWG NO. 8.1
9. FOR WINDOW DETAILS REFER DRWG NO. 9.1
10. FOR KITCHEN - PANTRY DETAILS REFER DRWG NO. 10.1
11. FOR MISCELLANEOUS DETAILS REFER DRAWING NO. 29.1
12. FOR VERANDAH DETAILS REFER DRAWING NO. 31.1

No.	Date.	Remarks.
Revisions		

Date	Prints	Issued to	Date	Prints	Issued to

Distribution of Prints

Key Plan

N

Consultants

Structural Consultants
VR SHAH Consulting Engineers

Services Consultants
dbHMS
2nd Floor, D-62, Sector -2,
Noida - 201301
www.dbhms.in

Landscape Consultants
Earthscapes Consultancy Pvt Ltd

Road and Pathways Consultants
Arhmm Infra Consultants LLP

Project

Nalanda University, Rajgir, Bihar

Title

TYPICAL DETAILS – PLUMBING

FOR TENDER

Dealt :	JK	Drawing No.	NUC(1)–MSH–P6.1
Checked :	AT		
Scale :	NTS	Aprd By :	VM
Date :	27.05.2015		

VASTU SHILPA CONSULTANTS
Architects I Planners I Urban Designers

'Sangath', Thaltej Road, Ahmedabad - 380054
Phone: 079 - 27454537 Fax: 079 - 27452006
www.sangath.org e-mail: vsc@sangath.org