Drawing and design are the property of Vastu Shilpa Consultants and are not to be copied or used without their permission.

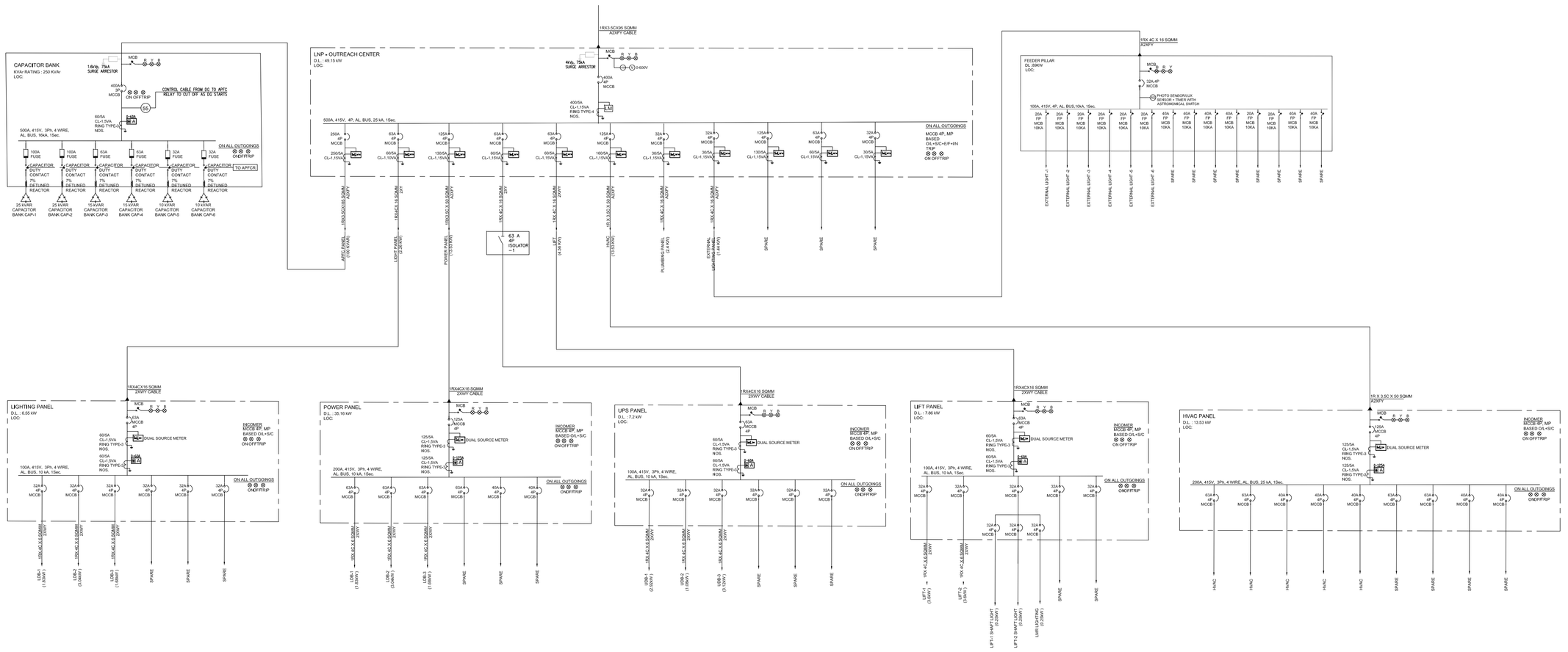

LEGEND

	AIR CIRCUIT BREAKER
	MOULDED CASE CIRCUIT BREAKER
	MINIATURE CIRCUIT BREAKER
LM	LOAD MANAGER
	EARTH
	CURRENT TRANSFORMER
	ISOLATOR
	MOTOR PROTECTION CIRCUIT BREAKER
	INDICATION LAMPS SC - SPRING CHANGED SP - SERVICE POSITION TP - TEST POSITION CSH - CONTROL SUPPLY HEALTHY
	LTPB - LAMP TEST PUSH BUTTON TCPB - TRIP COIL PUSH BUTTON ETPB - EMERGENCY TRIP PUSH BUTTON
TVSS	TRANSIENT VOLTAGE SURGE SUPPRESSOR
APFCR	AUTOMATIC POWER FACTOR CORRECTION RELAY
E/F	EARTH FAULT RELAY
MFM	MULTI FUNCTION METER
EMI	ELECTRICAL MEC. INTERLOCK
49	MACHINE OR TRANSFORMER THERMAL RELAY
50N	NEUTRAL GROUND OVER-CURRENT RELAY
81	FREQUENCY RELAY
59	OVER-VOLTAGE RELAY
51	AC TIME OVER-CURRENT RELAY
51N	TIME DELAY GROUND FAULT RELAY
V	VOLTMETER
VCS	VOLTMETER SELECTOR SWITCH
ACS	AMMETER SELECTOR SWITCH
A	AMMETER
	FUSE
	MARSHALLING BOX
	SURGE ARRESTER
	CAPACITOR BANK
	ANNUNCIATOR

NOTES:

1. ALL SWITCHGEARS SHALL BE PROVIDED WITH THE SWITCHES.
2. ALL SURGE ARRESTER SHALL BE WITH SURGE COUNTER.
3. ALL MCBS SHALL BE CURRENT LIMITING TYPE.
4. ALL MCCB SHALL BE MOUNTED ON FRONT OF MCCB. SHALL BE CLEARLY INDICATE OPERATING HANDLE FOR OPERATING MCCBS WITH THE DOOR CLOSED SHALL BE PROVIDED.
5. ALL INDICATING LAMPS SHALL BE MULTICHIP LED TYPE.
6. ALL BUS COUPLERS SHOULD BE WITH ON (RED) & OFF (GREEN) INDICATION LAMPS.
7. MULTI FUCTION METER & ENERGY METER SHALL BE PROVIDED WITH (BUT NOT LIMITED TO) FOLLOWING METRINGS FEATURES: CURRENT, VOLTAGE, ENERGY (KWH & KVAH).
8. ALL VERTICAL & HORIZONTAL BUSBARS SHALL BE WITH MENTIONED RATING THROUGHOUT.
9. MPCB SHALL BE USED INSTEAD OF FUSE WHILE FEEDING CONTROL SUPPLY VOLTAGE I.E. 230V AC DIRECTLY DERIVED FROM AC BUS.
10. ALL MCC PANELS / RELAY PANELS SHALL BE PROVIDED WITH ON/OFF/TRIP AND AUTO/MANUAL SELECTOR SWITCHES.
11. ALL MCC PANELS / RELAY SETTING & CONTROLS SHALL SUIT TO MOTOR CAPACITY AS PER TYPE 2 CO-ORDINATION.
12. MULTI FUNCTION METER (MFM) SHALL BE CLASS-1 AND SHALL BE PROVIDED WITH RS485 PORT & MOD BUS COMMUNICATION PROTOCOL.
13. METAL ENGRAVED CAUTION BOARDS SHALL BE RIVETTED ON COVERS FOR ELECTRICAL HAZARDS.
14. NEUTRAL IS REQUIRED FOR ALL PANELS AS SHOWN.SIZE OF NEUTRAL SHALL BE 50% OF PHASE FOR ALL PANELS EXCEPT UPS PANELS.FOR UPS PANLES NEUTRAL SHALL BE 200% OF PHASE.
15. FOR SPARE FEEDERS MFM / EM IS NOT REQUIRED. HOWEVER, SPACE PROVISION SHALL BE MADE FOR MFM / EM.
16. ALL MFM & METER WORKING SHALL BE SOFT SCHAUS RS485 PORT.
17. THE CONTRACTOR AND PANEL VENDOR IS RESPONSIBLE FOR RELAY/RELEASE COORDINATION, OVERCURRENT/EARTH FAULT/SHORT CIRCUIT CURRENT/SETTINGS AT VARIOUS LEVELS AND AT EACH PANELOB. TO ACHIEVE PROPER DISCRIMINATION. ACCORDINGLY RELAYS/RELEASES OF ALL MCCBS SHALL BE SUITABLY SELECTED, COORDINATED AND SET AT SITE BY ELECTRICAL CONTRACTOR TO ACHIEVE PROPER DISCRIMINATION.

1 SINGLE LINE DIAGRAM - ELECTRICAL

N

NOTES & INFORMATION

1. ALL DIMENSIONS ARE INDICATED IN MILLIMETERS UNLESS OTHERWISE SPECIFIED.
2. DIMENSIONS TO BE READ AND NOT MEASURED.
3. ANY DISCREPANCY FOUND SHALL BE BROUGHT TO THE NOTICE OF THE ARCHITECTS / ENGINEERS.
4. ALL DRAWINGS TO BE READ IN CONJUNCTION WITH RELEVANT STRUCTURAL, ARCHITECTURAL AND SERVICES DRAWINGS.

No.	Date.	Remarks.

Revisions

Date	Prints	Issued to	Date	Prints	Issued to

Distribution of Prints

Key Plan

N

Consultants

Structural Consultants
VR SHAH Consulting Engineers

Services Consultants
dbHMS
2nd Floor, D-62, Sector -2,
Noida - 201301
www.dbhms.in

Landscape Consultants
Earthscapes Consultancy Pvt Ltd

Road and Pathways Consultants
Arhmm Infra Consultants LLP

Project

Nalanda University, Rajgir, Bihar

Title

SINGLE LINE DIAGRAM – ELECTRICAL

Dealt : AD	Drawing No. NUC–OC–E4.0
Checked : M.T	
Scale : N.T.S.	Approved :
Date : 2016.08.05	

VASTU SHILPA CONSULTANTS
Architects I Planners I Urban Designers

'Sangath', Thaltej Road, Ahmedabad - 380054
Phone: 079 - 27454537 Fax: 079 - 27452006
www.sangath.org e-mail: vsc@sangath.org